VIGO®

http://www.vigoindustries.com
1-866-591-7792

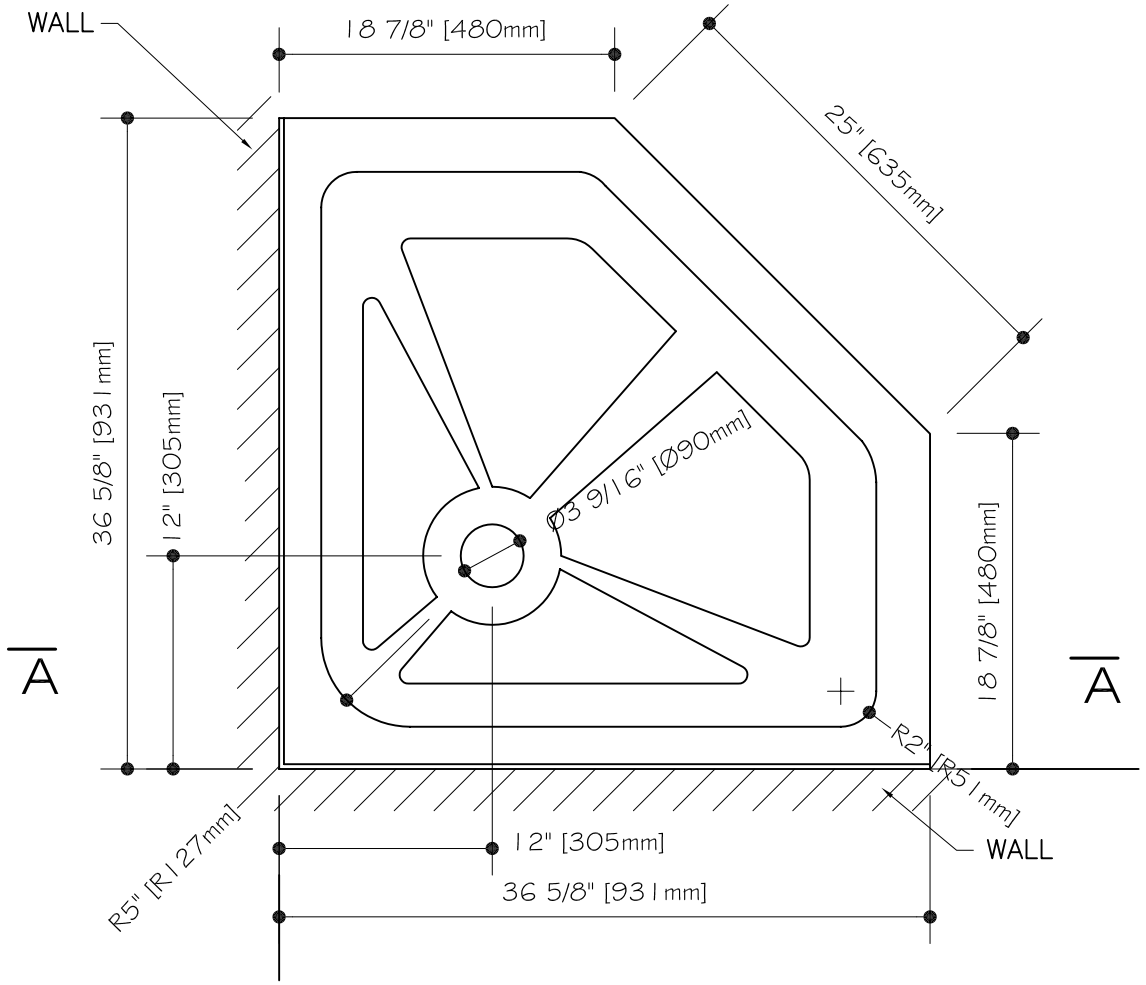

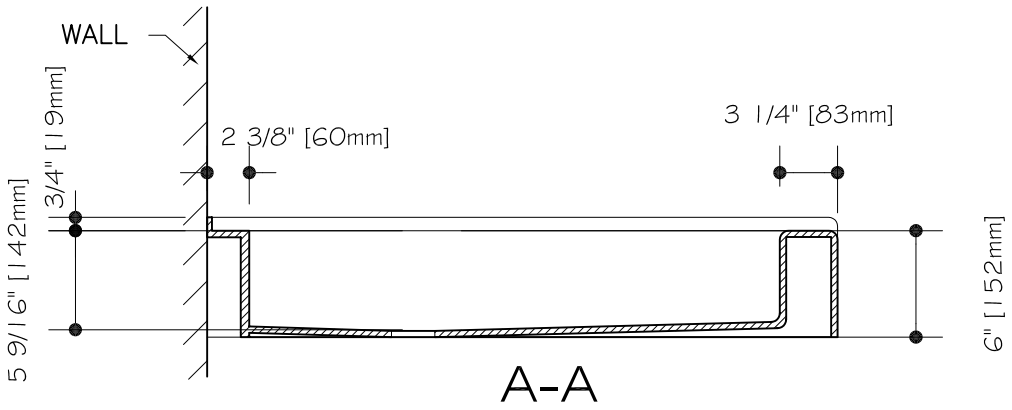

MODEL VG6326XXX36

THE MEASUREMENTS IN INCHES ARE ROUNDED TO THE NEAREST 1/16"